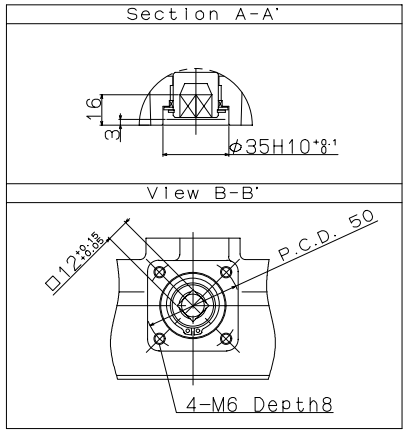

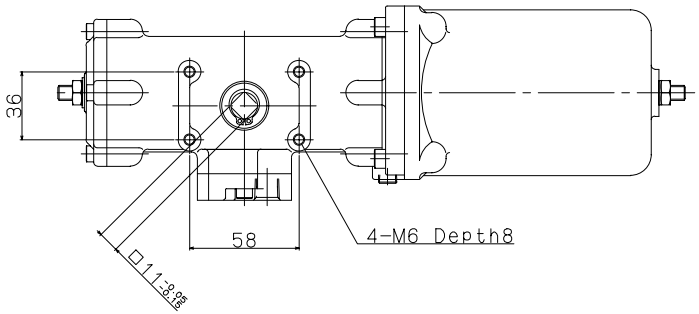

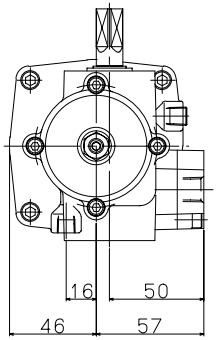

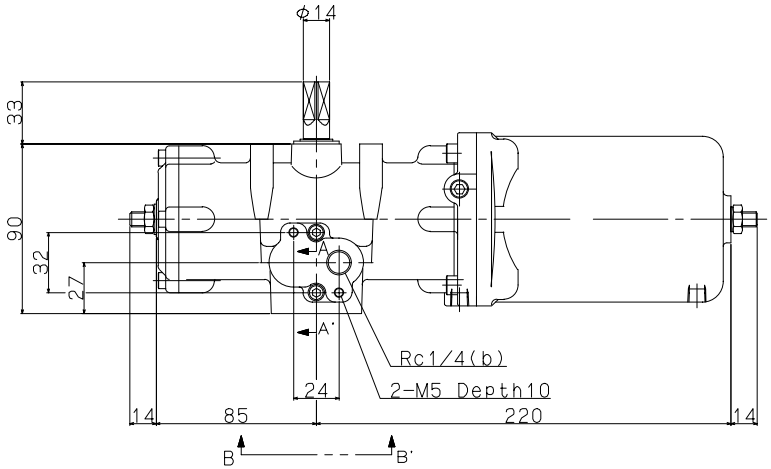

Symbol	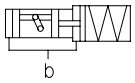
Model:	TA2-050L-00
Maker:	KONAN
File Name:	TA2-050L-00